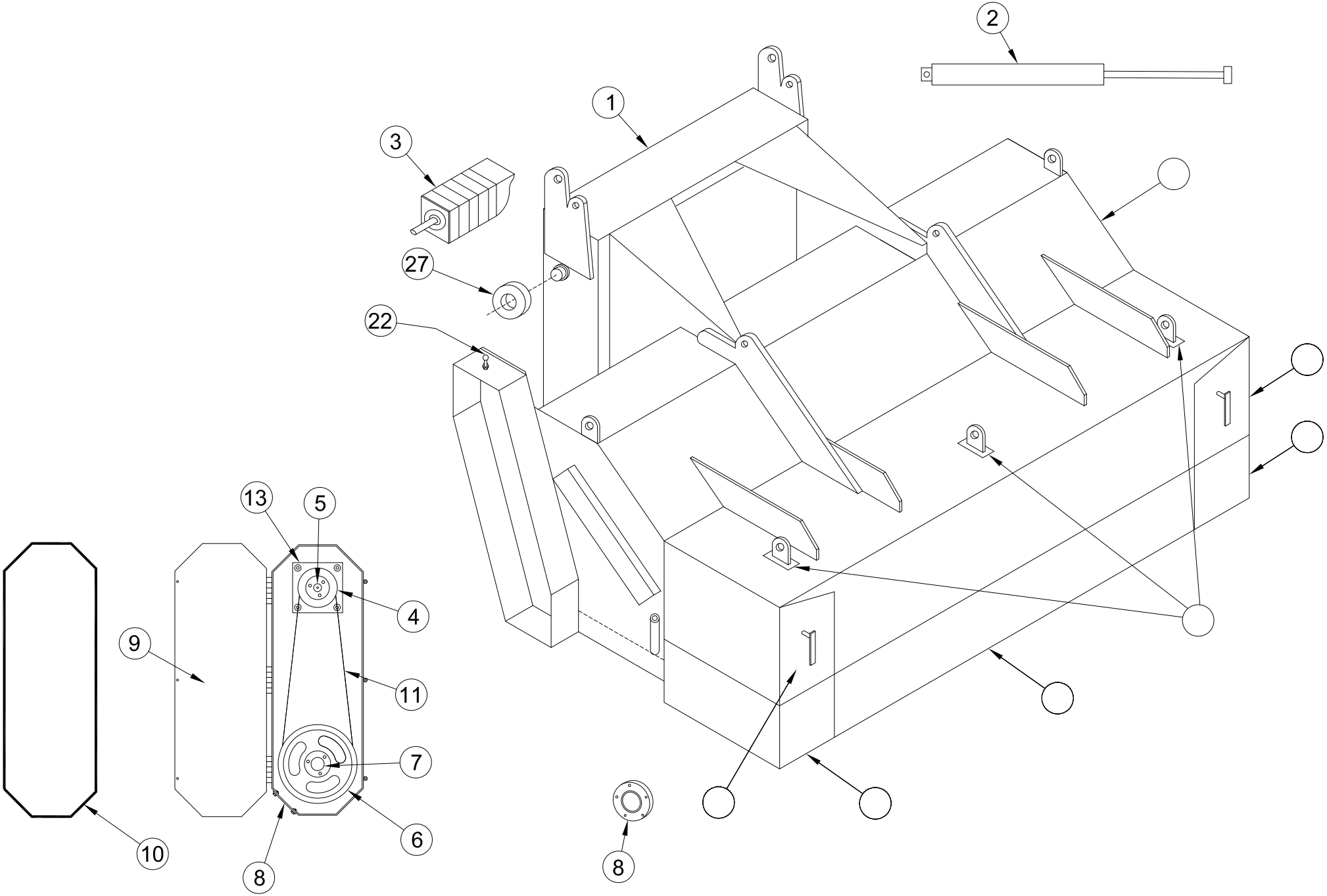

HUEYS WELDING INC. 7600 ALBANY HWY. MILLWOOD, GA 31552 PH. 912-285-3954	DRAWN BY: WLG	SCALE: N.T.S.	UNITS SAE	REVISIONS:	DESCRIPTION OF REVISION	PRINT NUMBER: HWB-01870RH
	PRINT DATE: 1-6-2012	MATERIAL: N/A	TOLERANCE: N/A			HUEY'S PART NUMBER ROUND HOUSE BROOM